ARGANO MANUALE AUTOFRENANTE PER SOLLEVAMENTO

MANUAL WINCH AUTOMATIC BRAKE TO LIFT

CODICE : 550.180.02C

Rapporto riduzione 1:4
Trazione 4455N (550 Kg)

Riduction ratio 1:4
Traction 4455N (550 Kg)

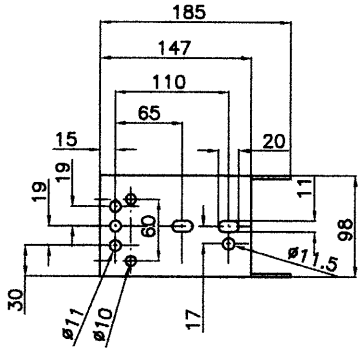

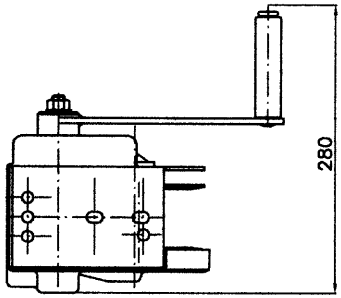

Forza max applicabile 196.2N (20Kg)
Max force on lever 196.2N (20Kg)

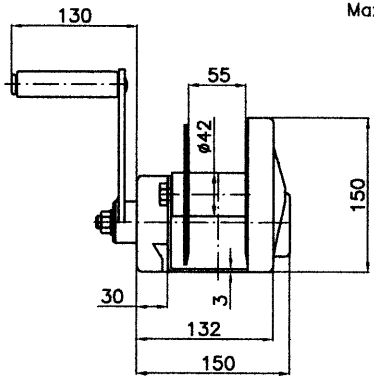

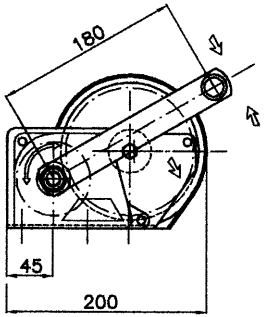

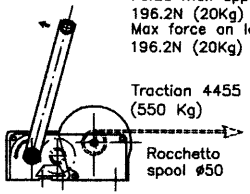

Forza max applicabile
196.2N (20Kg)
Max force on lever
196.2N (20Kg)

Traction 4455 N
(550 Kg)

Rocchetto
spool ø50

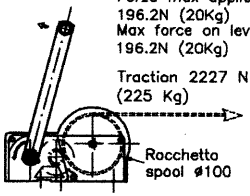

Forza max applicabile
196.2N (20Kg)
Max force on lever
196.2N (20Kg)

Traction 2227 N
(225 Kg)

Rocchetto
spool ø100